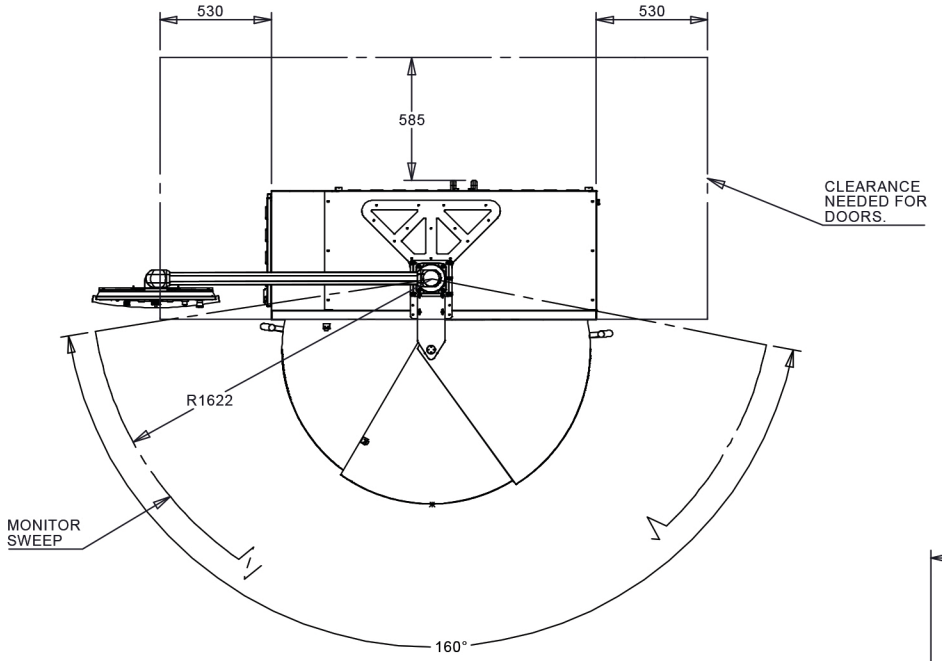

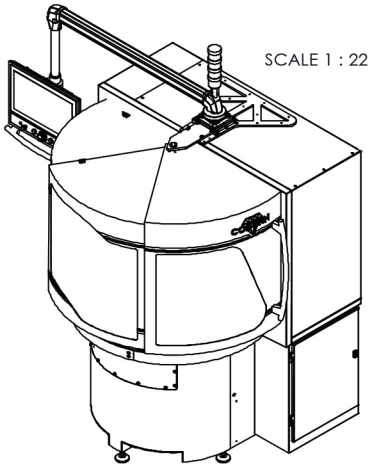

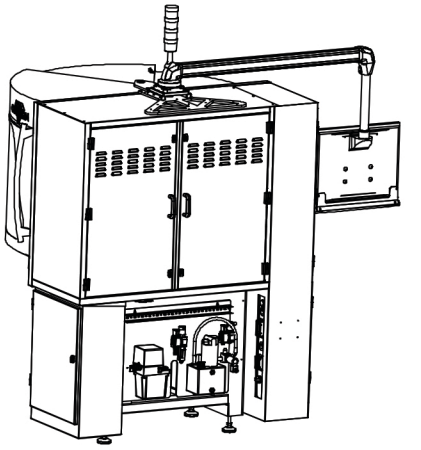

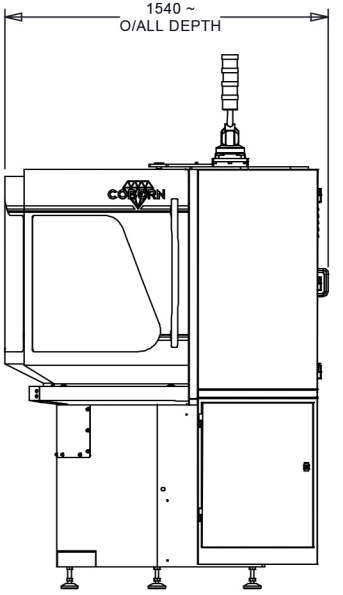

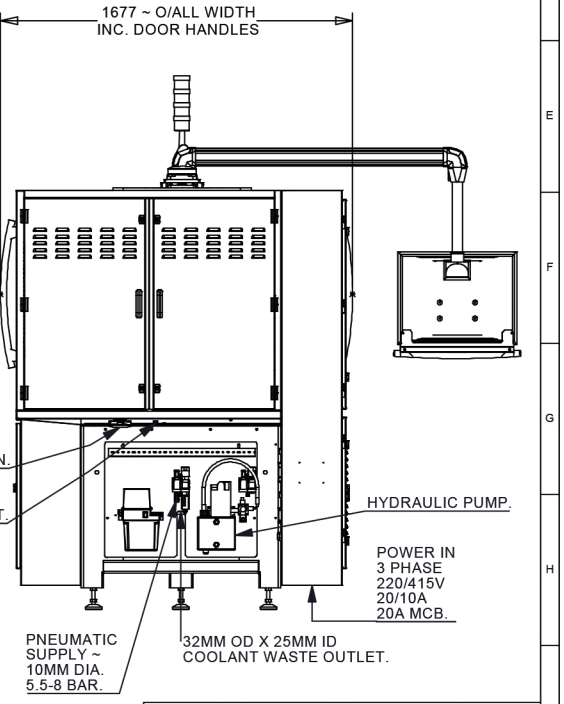

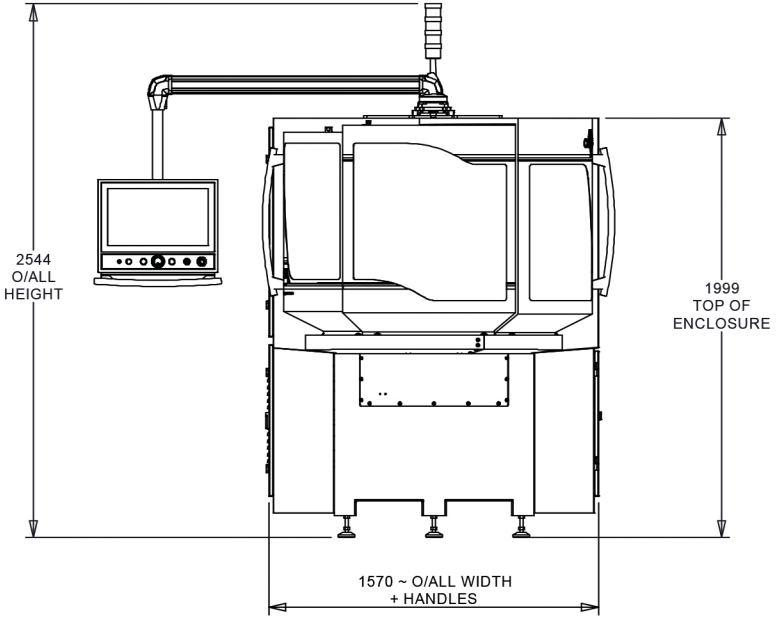

ALL CHANGES MUST BE MADE ON CAD PRIOR TO PRODUCTION

ISS	DATE	AMENDMENTS	ECR #	CHK

COBORN ENGINEERING COMPANY LTD.
CHESHAM CLOSE, ROMFORD
ESSEX, RM7 7PJ, ENGLAND
Telephone +44(0) 1708 744666
FAX +44(0) 1708 725187
e-mail enquiries@coborn.com
website www.coborn.com

® THIS DRAWING IS THE PROPERTY OF COBORN ENGINEERING COMPANY LIMITED AND MUST NOT BE COPIED IN WHOLE OR PART WITHOUT WRITTEN PERMISSION. ALL RIGHTS RESERVED

ALL DIMENSIONS IN MILLIMETERS (INCHES) 3rd Angle

GENERAL MACHINING TOLERANCES UNLESS OTHERWISE STATED
X ± .5 (.02"), X.X ± .2 (.008"), X.XX ± .05 (.002"), X.XXX ± .013 (.0005"), ANGLES ±1/2° MACHINED/PREPARED SURFACE 1.6

TITLE
RG9A
GA

SCALE	DATE	DRAWN	SHT	MACHINE PART No	ISS
A2 1:18	22/09/2015	RB	1 OF 1	0011-G00001 a	

MAT'L | FINISH | COLOUR | WEIGHT | CHK'D

T:\CAD\RG MACHINES\RG 9A\